REVISIONS			
REV.	DESCRIPTION	DATE	APPROVED

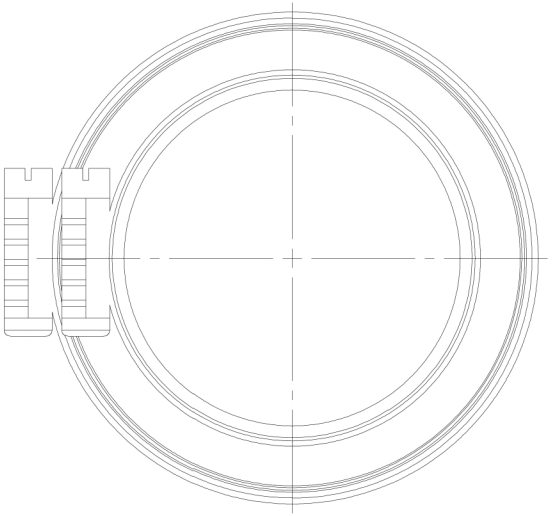

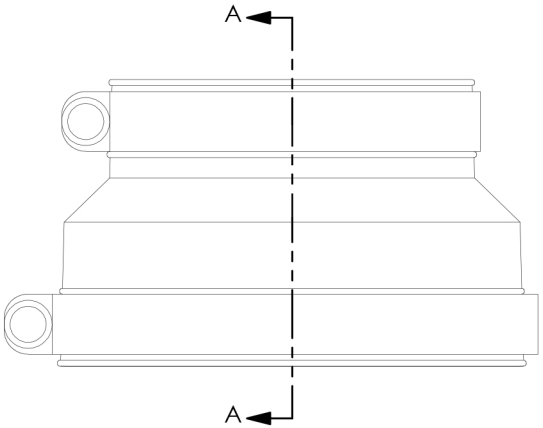

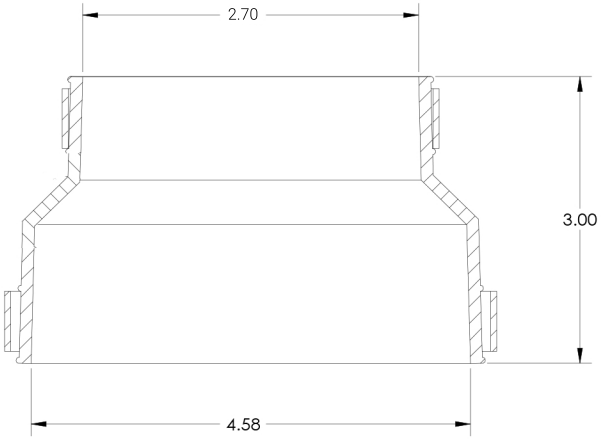

SECTION A-A

UNLESS OTHERWISE SPECIFIED:		NAME	DATE
DIMENSIONS ARE IN INCHES TOLERANCES: FRACTIONAL ± ANGULAR: MACH ± BEND ± TWO PLACE DECIMAL ± THREE PLACE DECIMAL ±	DRAWN		
	CHECKED		
	ENG APPR.		
	MFG APPR.		
MATERIAL	Q.A.		
FINISH	COMMENTS:		
DO NOT SCALE DRAWING			

PROPRIETARY AND CONFIDENTIAL

THE INFORMATION CONTAINED IN THIS DRAWING IS THE SOLE PROPERTY OF **ZJ INDUSTRIAL PRODUCTS**. ANY REPRODUCTION IN PART OR AS A WHOLE WITHOUT THE WRITTEN PERMISSION OF **ZJ INDUSTRIAL PRODUCTS** IS PROHIBITED.

ZJI INDUSTRIAL PRODUCTS

TITLE: **ZJI TF 4.5x2.7**

SIZE	DWG. NO.	REV
C	TF 4.5 x 2.7	

SCALE: 1:1 | WEIGHT: | SHEET 1 OF 1